iFlight BLITZ Whoop F7 AIO Wiring Diagram

Caution

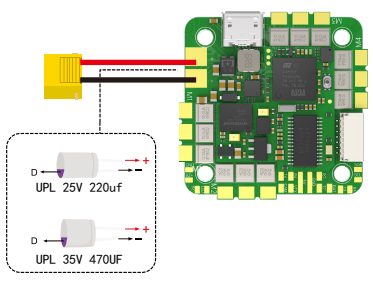

- This is a tiny high power AIO board! It's neccesary to add a low ESR capacitor on your battery pads or battery lead! There's a choice of capacitors already in the package.
- 4s motors usually need 25v/220uF and up,for bigger and more aggressive 6s motors use at least 35v/470uF.It'snecessary to protect the hardware from motor generated back emf and voltage spikes.

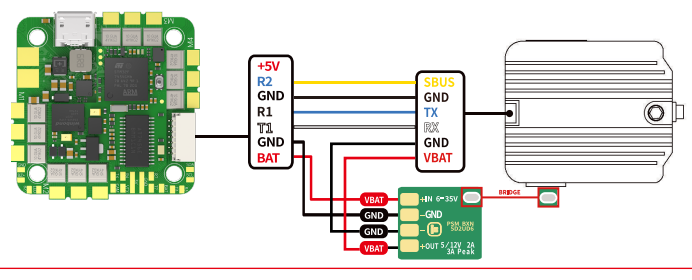

- The DJI Plug&Play connector has a VBAT passthrough! Please remember, the DJI Air Unit canjust handle voltage up to 4S! To fly up to 6S batteries, please use an additional BEC (Voltage regulator).

Pad definition

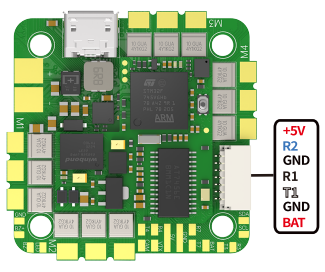

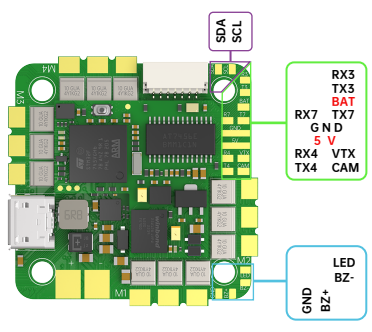

DJI Digital transmitters

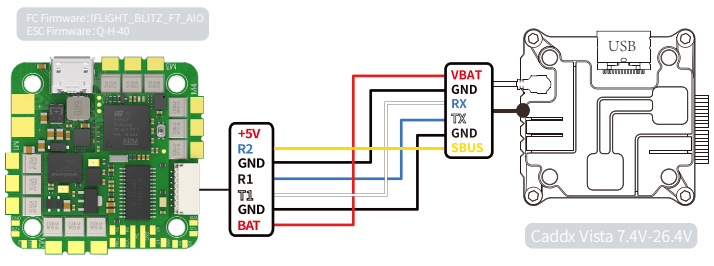

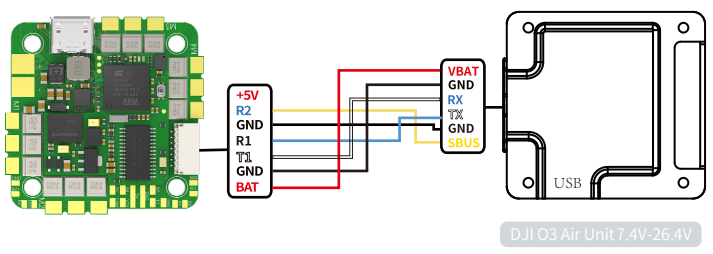

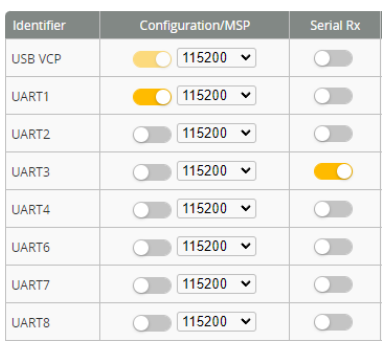

- Please check your protocols, otherwise your DJI Radio won' t input signals!
  DJI Goggle protocol and Betaflight protocol has to match!
  For lower signal latency use the SBUS_BAUD_FAST protocol option on both ends.
  For Betafllght Copy\Paste "set sbus_baud_fast=on" into your Beataflight Configurator CLI then hit enter.
  Use"save" and hit enter to save the changes .
  Default: sbus_baud_fast=off, Goggle protocol set to NORMAL

- For DJI O3 Air Unit,In to the Betaflight Configurator Cli,
  Set osd device to MSP :"set osd_displayport_device = MSP"
  Specify the serial port of msp_displayport as 0(the number in this place should be the serial port number minus 1):
  "set displayport_msp_serial = 0"
  then type "save" and exit

Another Transmitters

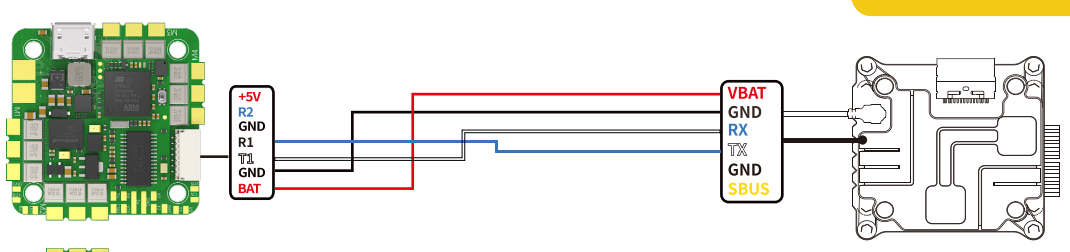

When not using the DJI remote controller, don't connect the SBUS and GND.

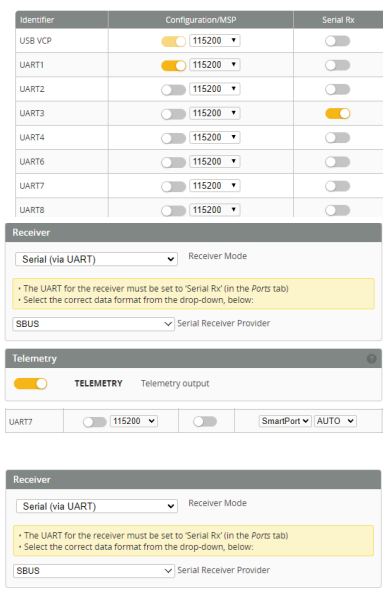

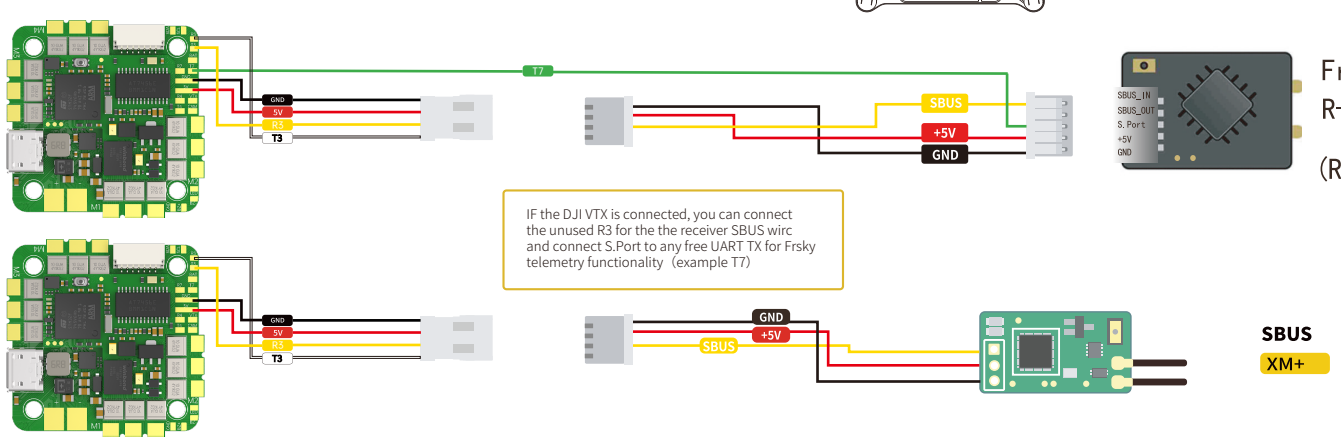

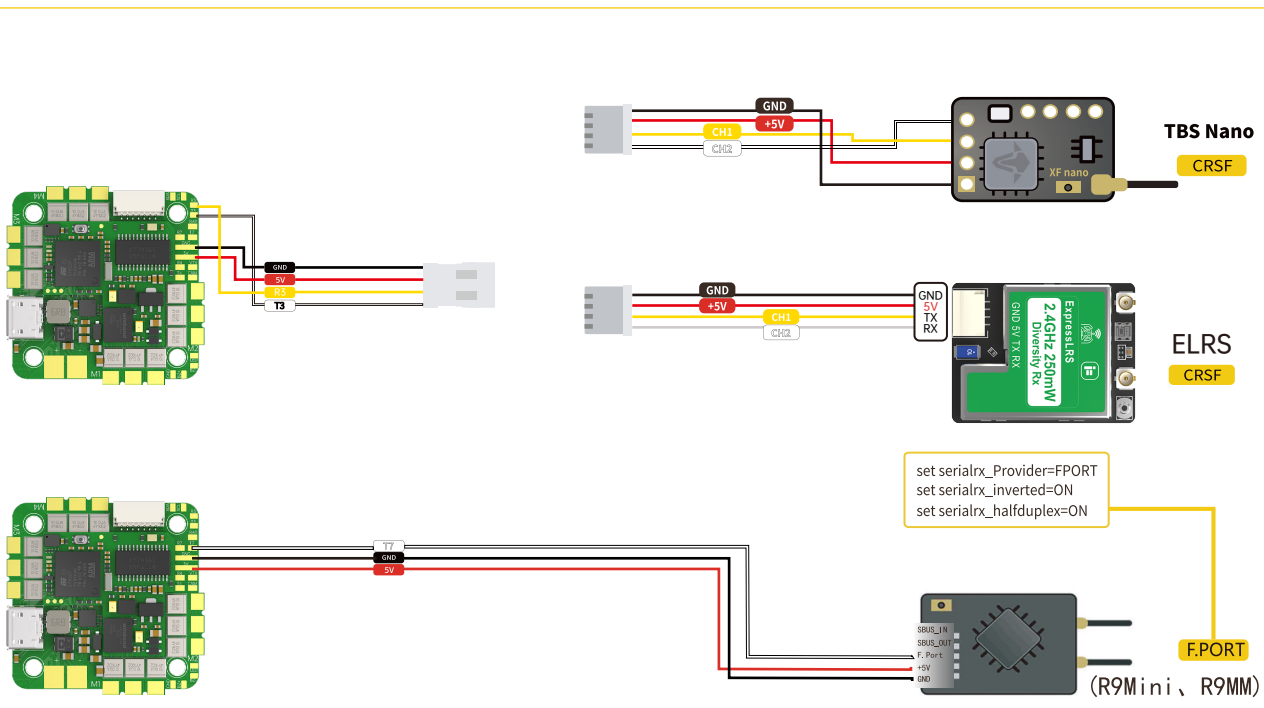

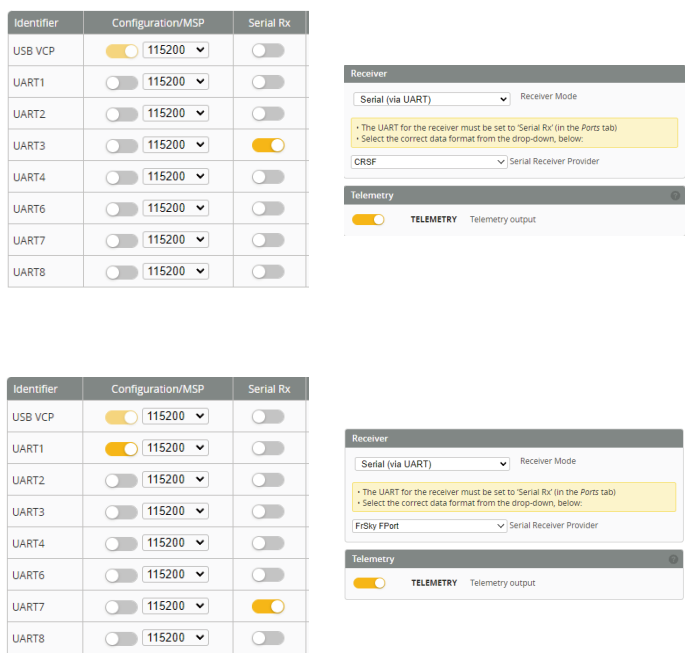

Anti-Spark filter

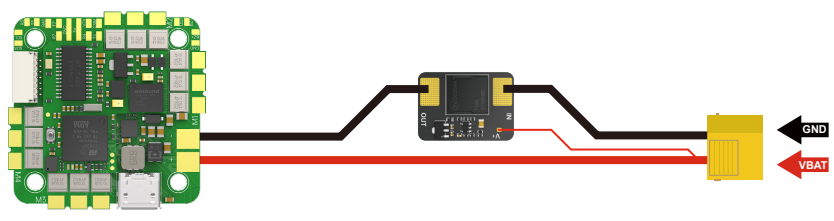

Analog VTX

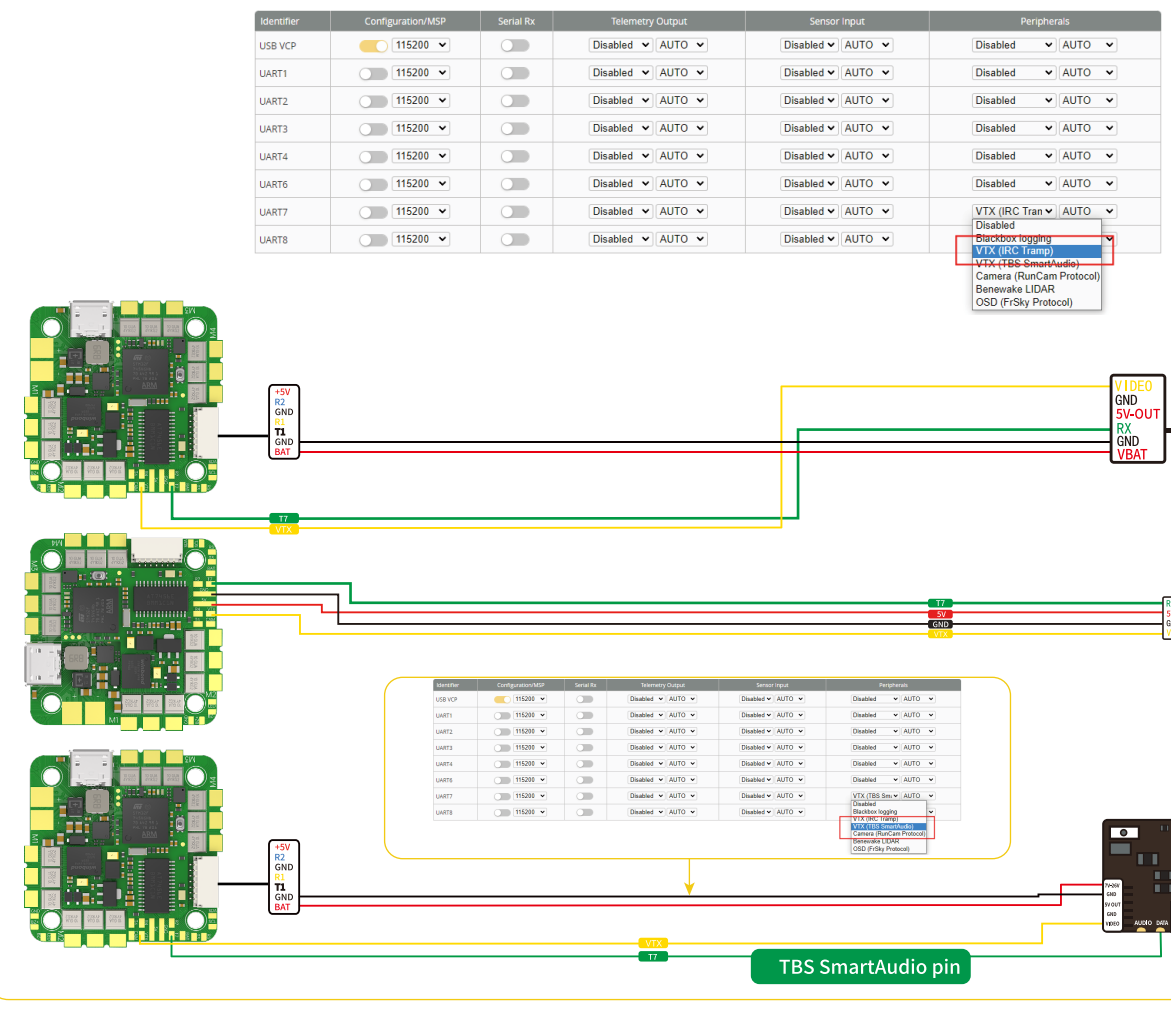

LED&Buzzer

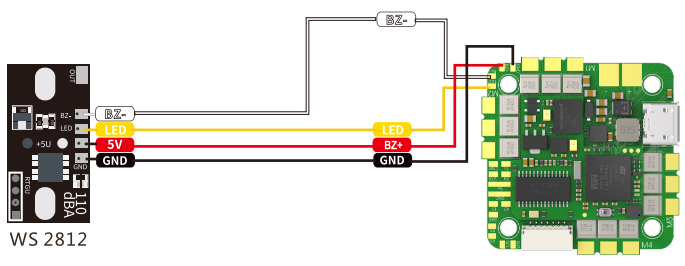

CAM

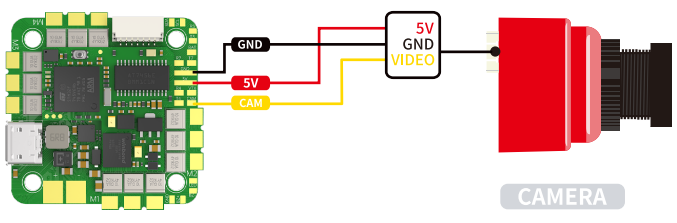

status indicator

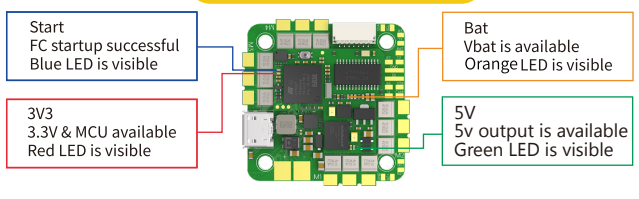
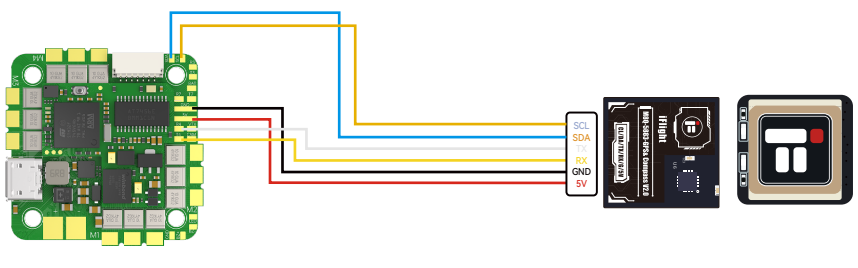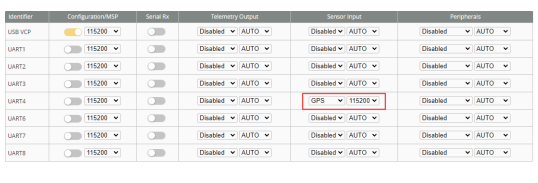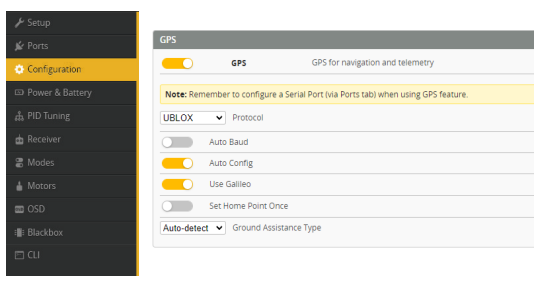
GPS